NPA - REQUEST FORM FOR NON STANDARD CONTROL STATION

Instructions

Fill in the chart to the left according to the number of control elements required (2, 3, 4, 6, 8, 10, or 12 actuators).

1. **Control elements**: in the broken-line box enter the number corresponding to the control element required (1 to 41).

   For dust-tight pushbuttons enter the number corresponding to the disk required (1 to 28).

   For standard buttons (30), write the code corresponding to the button required (see standard button tables).

   If you choose **pushbuttons with arrows**, enter the direction of the arrow into the corresponding circle.

2. **Switches:** in the unbroken boxes enter the letters corresponding to the switches required (A to I) .

3. **Mechanical interlock**: tick the boxes where the mechanical interlock (MI) between two control elements is required. Eg. [X]

4. **Cable sleeve and hook:** tick the appropriate boxes to show where the cable sleeve, the hook and the wire fixing must be assembled (top or bottom).

1 Control elements

Disks for dust-tight pushbuttons

Control elements

30	TL_ _ _ _ _ _ _	Button
31	PRSL0517PI	Blanking plug
32	PRSL0500PI	Latched mushroom pushbutton for emergency stop
33	PRSL0512PI	Impulse mushroom pushbutton
34	PRSL0520PI	Key mushroom pushbutton (yellow)
35	PRSL0520RO	Key mushroom pushbutton (red)
36	PRSL0513PI	2 or 3 maintained positions key selector switch
37	PRSL0514PI	2 or 3 maintained positions selector switch
38	PRSL0519PI	Spring return 2 or 3 positions selector switch
39	PRSL0515PI	Red pilot light
40	PRSL0516PI	Green pilot light
41	PRSL0521PI	Yellow pilot light

2 Switches
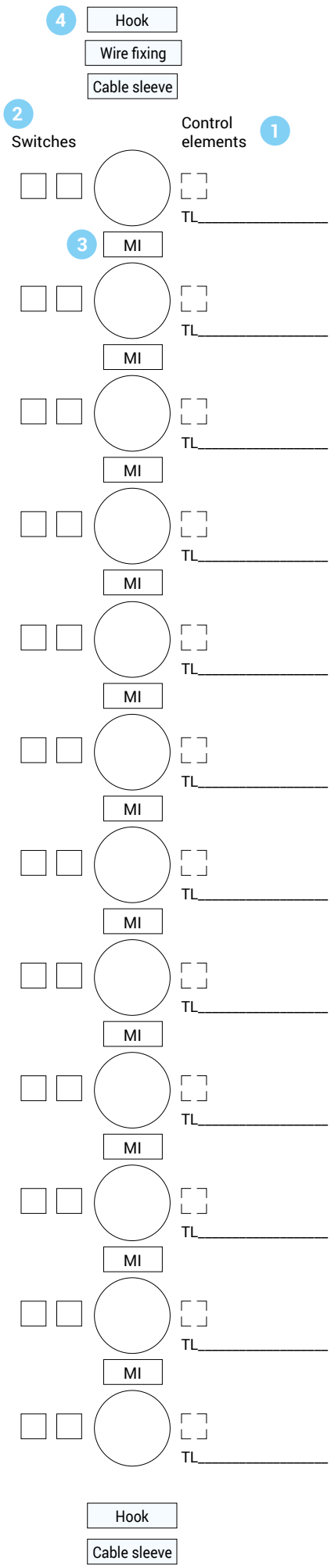
A	PRSL0501PI	Lamp holder (without bulb)
B	PRSL0502PI	Switch 1NC
C	PRSL0503PI	Switch 1NO
D	PRSL0504PI	1 speed switch, 1NO+1NC+1NO simultaneous
E	PRSL0505PI	2 speed switch, 1NO+1NC+1NO sequenced
F	PRSL0506PI	1 speed switch, 3NO simultaneous
G	PRSL0507PI	3 speed switch, 3NO sequenced
H	PRSL0508PI	1 speed switch, 3NC simultaneous
I	PRSL0510PI	Switch 1NO for mushroom pushbutton