50A - REQUEST FORM FOR NON STANDARD SLIP RING COLLECTOR

Rings

No. of 50A rings (max 16) _____

Tube length

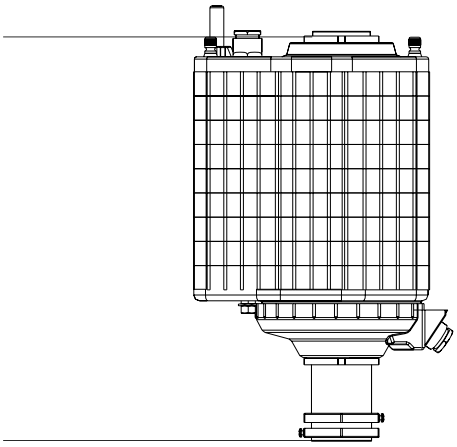

Cable glands

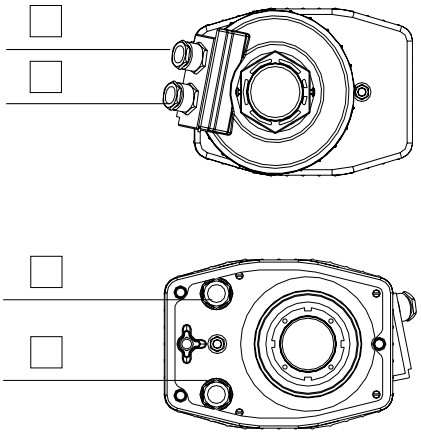

1 M20

2 M25

Instructions

- Write the number of 50A rings required.
- Write the length of the input and output tube required, when different from the length shown in the overall dimensions.
- Write the type of cable glands required on the upper cover and on the lower plate.

Remarks